BLOCK FIXTURE KSM

Model selection: SH – 35 – 40.6J

- Material : SK105

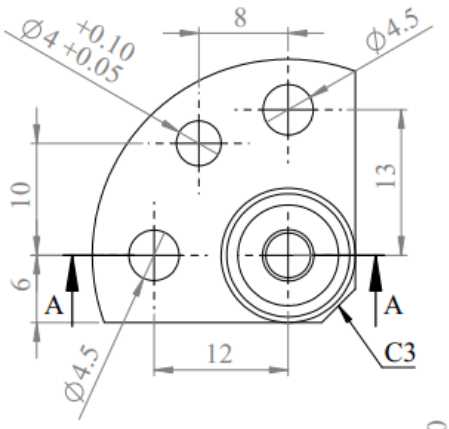

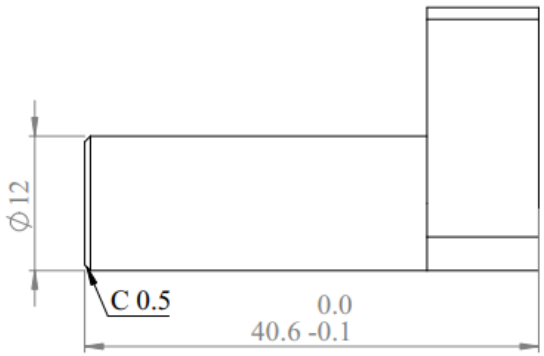

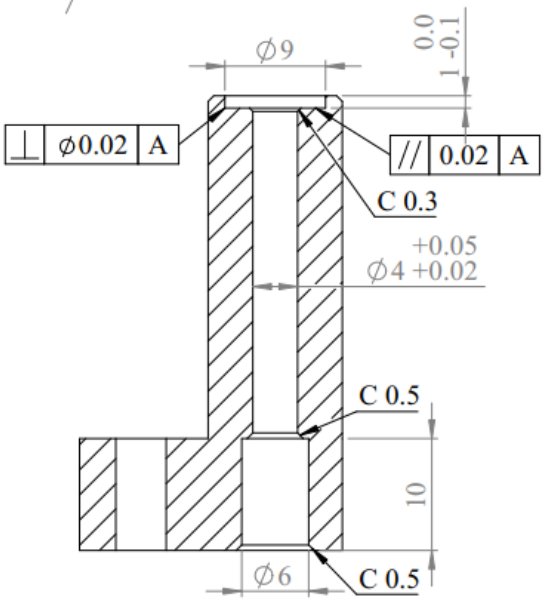

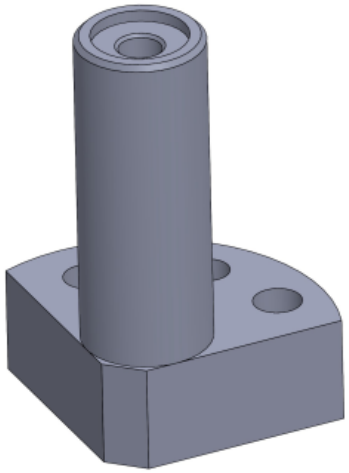

www.easychangetech.com